1st EDITION

COAST
ELECTRONICS
SUPPLY

SWITCHES CATALOG

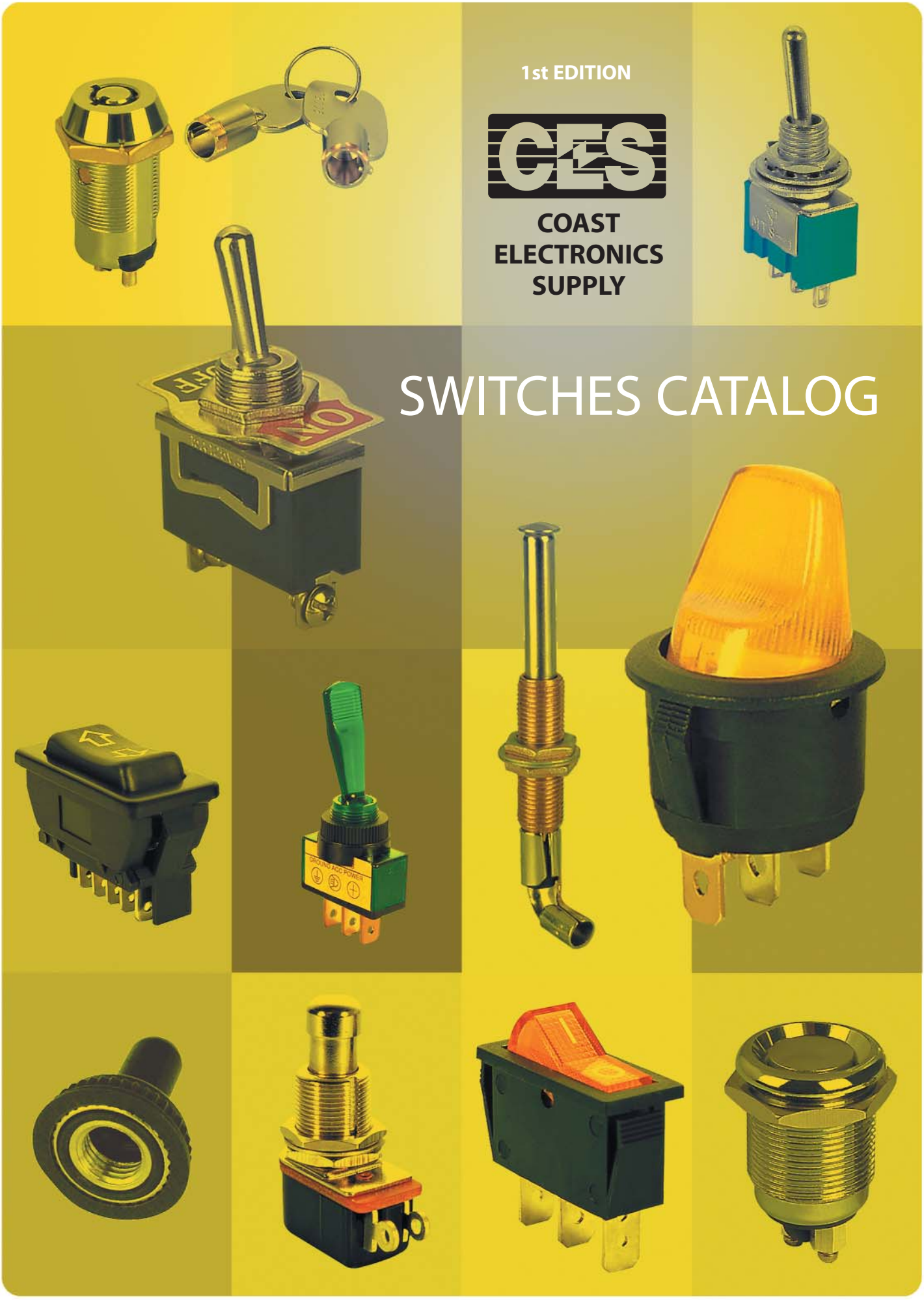

SUB-MINI TOGGLE SWITCH

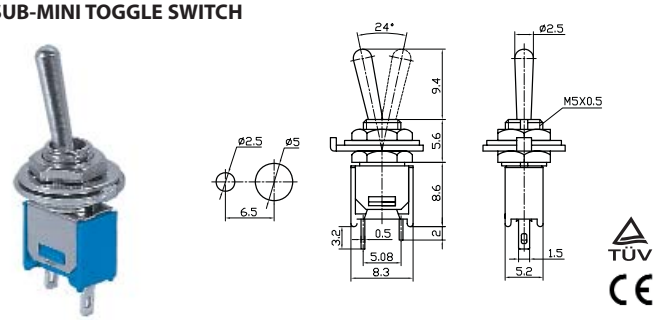

PART #	DESCRIPTION	RATING A	RATING B
66-1001	ON-OFF/SPST 2P	3 AMPS/125 VAC	1.5 AMPS/250 VAC

SUB-MINI TOGGLE SWITCH

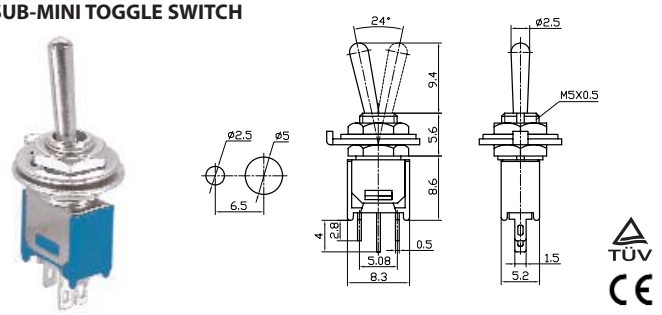

PART #	DESCRIPTION	RATING A	RATING B
66-1002	ON-ON/SPDT 3P	3 AMPS/125 VAC	1.5 AMPS/250 VAC
66-1003	ON-OFF-ON/SPDT 3P	3 AMPS/125 VAC	1.5 AMPS/250 VAC

SUB-MINI TOGGLE SWITCH

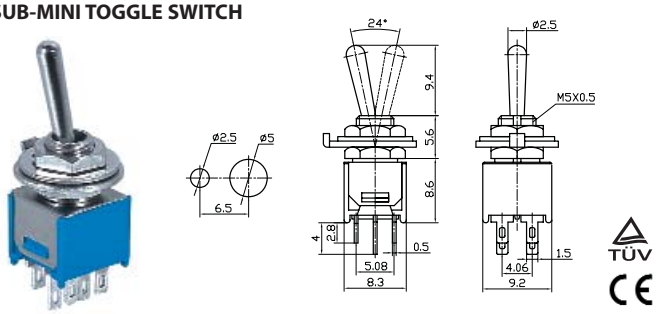

PART #	DESCRIPTION	RATING A	RATING B
66-1005	ON-ON/DPDT 6P	3 AMPS/125 VAC	1.5 AMPS/250 VAC
66-1006	ON-OFF-ON/DPDT 6P	3 AMPS/125 VAC	1.5 AMPS/250 VAC

MINI TOGGLE SWITCH

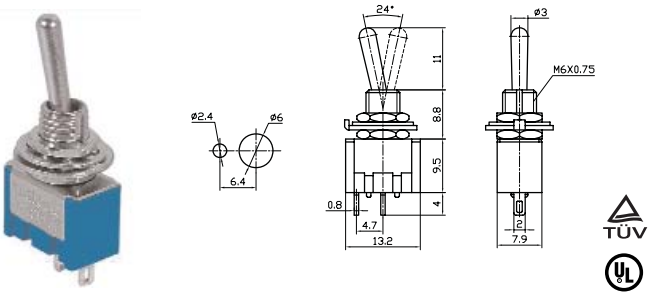

PART #	DESCRIPTION	RATING A	RATING B
66-1201	ON-OFF/SPST 2P	6 AMPS/125 VAC	3 AMPS/250 VAC

MINI TOGGLE SWITCH

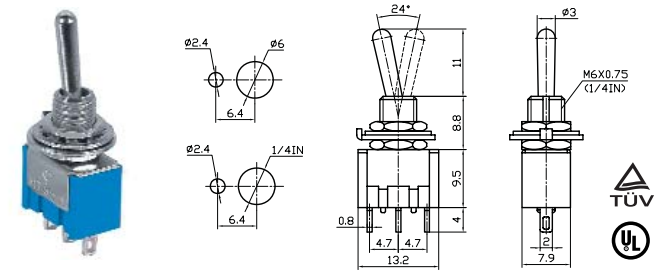

PART #	DESCRIPTION	RATING A	RATING B
66-1202	ON-ON/SPDT 3P	6 AMPS/125 VAC	3 AMPS/250 VAC
66-1203	ON-OFF-ON/SPDT 3P	6 AMPS/125 VAC	6 AMPS/250 VAC
66-1250	(ON)-OFF-(ON)/SPDT 3P	6 AMPS/125 VAC	6 AMPS/250 VAC

MINI TOGGLE SWITCH

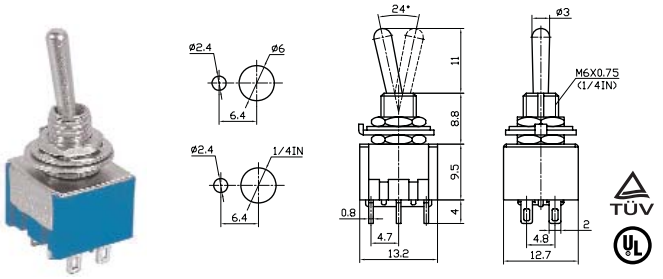

PART #	DESCRIPTION	RATING A	RATING B
66-1205	ON-ON/DPDT 6P	6 AMPS/125 VAC	3 AMPS/250 VAC
66-1206	ON-OFF-ON/DPDT 6P	6 AMPS/125 VAC	3 AMPS/250 VAC
66-1251	(ON)-OFF-(ON)/DPDT 6P	6 AMPS/125 VAC	3 AMPS/250 VAC
66-1255	ON-OFF-(ON)/DPDT 6P	6 AMPS/125 VAC	3 AMPS/250 VAC

MINI TOGGLE SWITCH

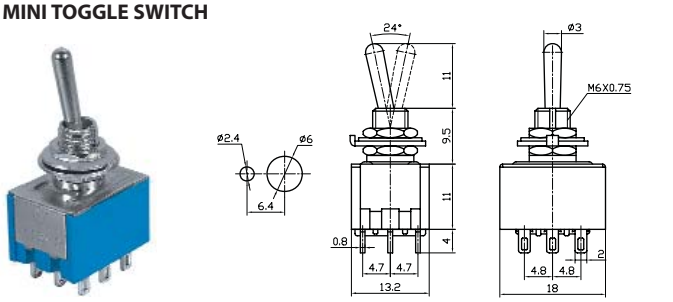

PART #	DESCRIPTION	RATING A	RATING B
66-1210	ON-ON/3PDT 9P	6 AMPS/125 VAC	3 AMPS/250 VAC
66-1215	ON-OFF-ON/3PDT 9P	6 AMPS/125 VAC	3 AMPS/250 VAC

MINI TOGGLE SWITCH

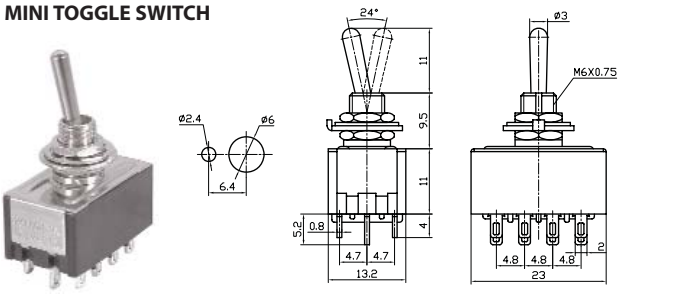

PART #	DESCRIPTION	RATING A	RATING B
66-1220	ON-ON/4PDT 12P	6 AMPS/125 VAC	3 AMPS/250 VAC

MINI TOGGLE SWITCH

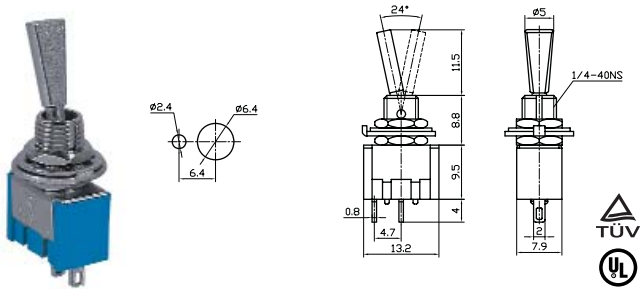

PART #	DESCRIPTION	RATING A	RATING B
66-1225	ON-OFF/SPST 2P	6 AMPS/125 VAC	3 AMPS/250 VAC

MINI TOGGLE SWITCH

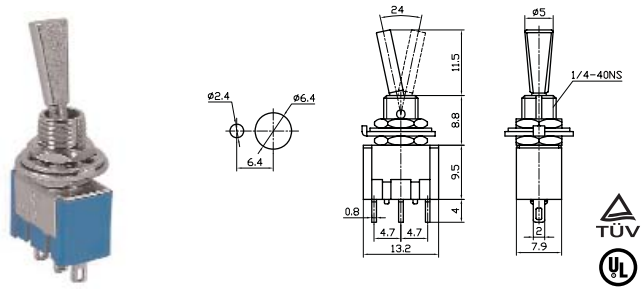

PART #	DESCRIPTION	RATING A	RATING B
66-1226	ON-ON/SPDT 3P	6 AMPS/125 VAC	3 AMPS/250 VAC
66-1227	ON-OFF-ON/SPDT 3P	6 AMPS/125 VAC	3 AMPS/250 VAC

MINI TOGGLE SWITCH

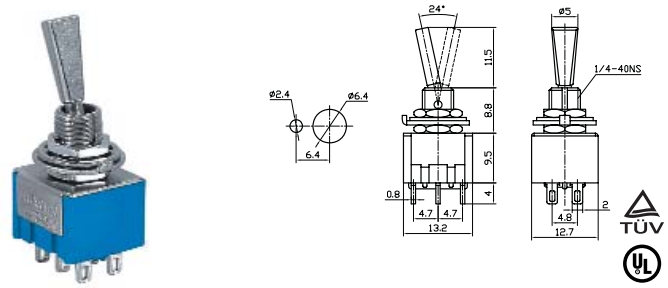

PART #	DESCRIPTION	RATING A	RATING B
66-1228	ON-ON/DPDT 6P	6 AMPS/125 VAC	3 AMPS/250 VAC
66-1229	ON-OFF-ON/DPDT 6P	6 AMPS/125 VAC	3 AMPS/250 VAC

MINI TOGGLE SWITCH

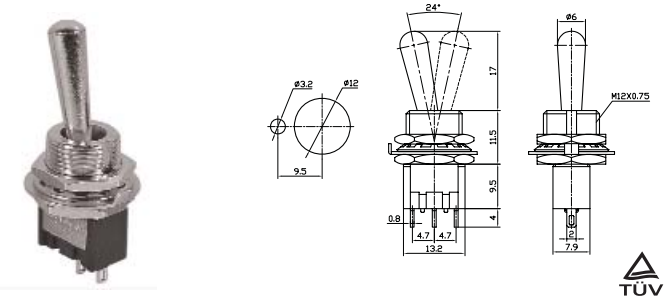

PART #	DESCRIPTION	RATING A	RATING B
66-1230	ON-OFF/SPST 2P	6 AMPS/125 VAC	3 AMPS/250 VAC

MINI TOGGLE SWITCH

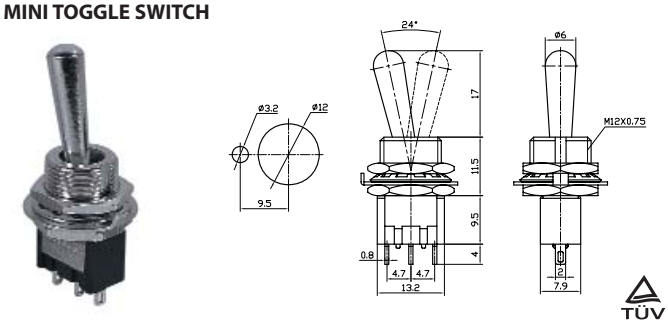

PART #	DESCRIPTION	RATING A	RATING B
66-1231	ON-ON/SPDT 3P	6 AMPS/125 VAC	3 AMPS/250 VAC
66-1232	ON-OFF-ON/SPDT 3P	6 AMPS/125 VAC	3 AMPS/250 VAC

STANDARD DUTY TOGGLE SWITCH

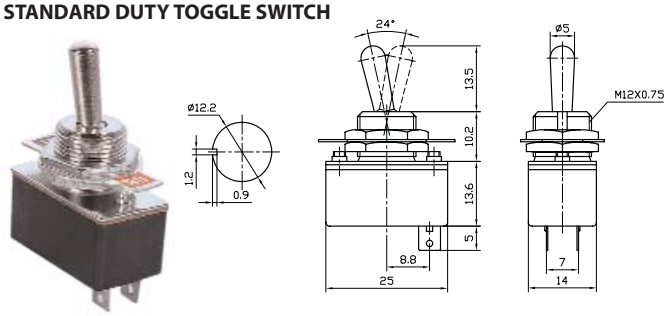

PART #	DESCRIPTION	RATING A	RATING B
66-1401	ON-OFF/SPST 2P	4 AMPS/125 VAC	2 AMPS/250 VAC

STANDARD DUTY TOGGLE SWITCH

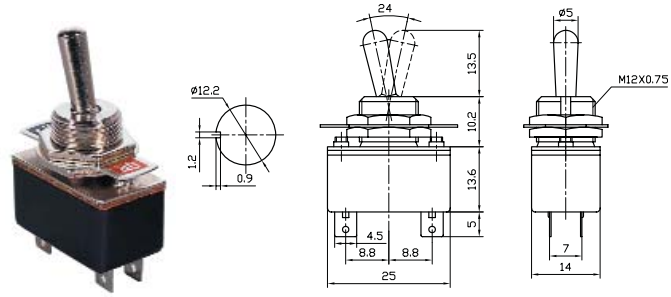

PART #	DESCRIPTION	RATING A	RATING B
66-1402	ON-ON/SPDT 4P	4 AMPS/125 VAC	2 AMPS/250 VAC

STANDARD DUTY TOGGLE SWITCH

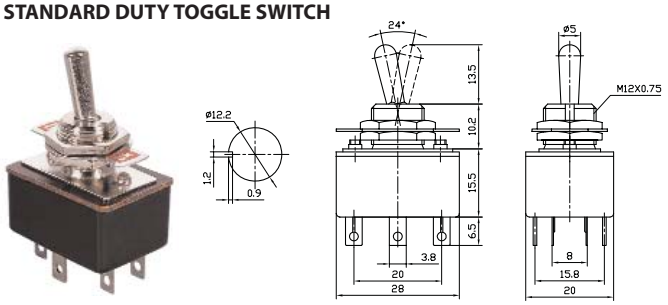

PART #	DESCRIPTION	RATING A	RATING B
66-1405	ON-ON/DPDT 6P	5 AMPS/125 VAC	3 AMPS/250 VAC

MEDIUM DUTY TOGGLE SWITCH

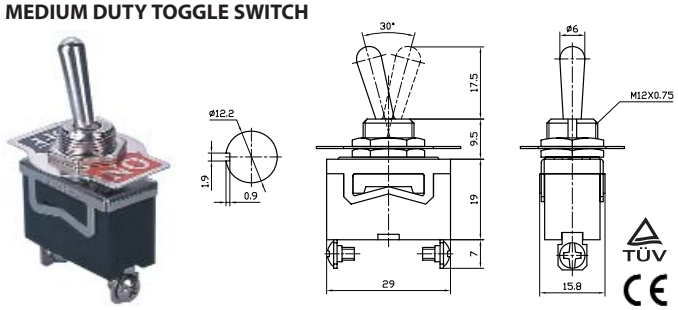

PART #	DESCRIPTION	RATING A	RATING B
66-1620	ON-OFF/SPST 2P	10 AMPS/125 VAC	6 AMPS/250 VAC

MEDIUM DUTY TOGGLE SWITCH

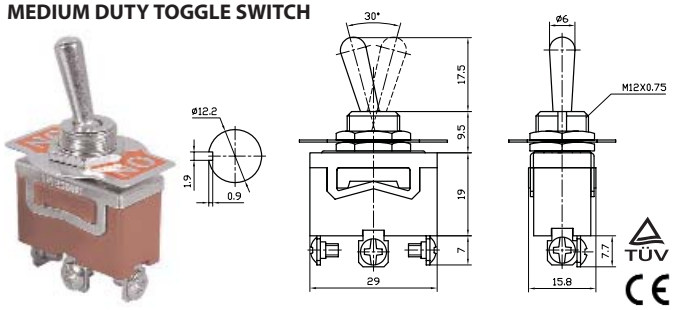

PART #	DESCRIPTION	RATING A	RATING B
66-1621	ON-ON/SPDT 3P	10 AMPS/125 VAC	6 AMPS/250 VAC
66-1622	ON-OFF-ON/SPDT 3P	10 AMPS/125 VAC	6 AMPS/250 VAC

MEDIUM DUTY TOGGLE SWITCH

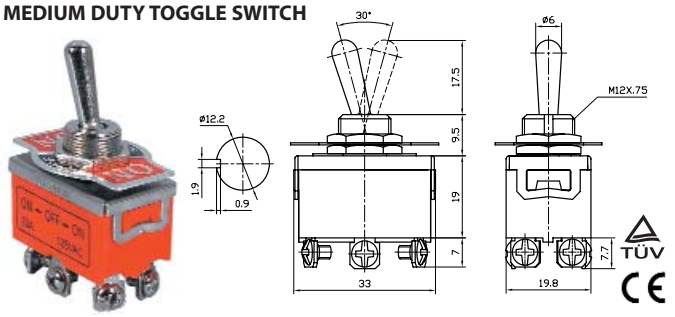

PART #	DESCRIPTION	RATING A	RATING B
66-1623	ON-ON/DPDT 6P	10 AMPS/125 VAC	6 AMPS/250 VAC
66-1624	ON-OFF-ON/DPDT 6P	10 AMPS/125 VAC	6 AMPS/250 VAC

HEAVY DUTY TOGGLE SWITCH

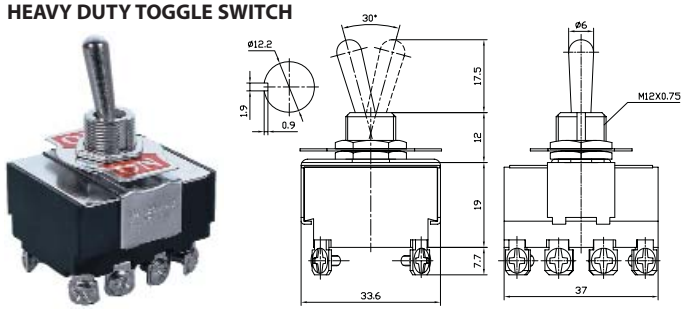

PART #	DESCRIPTION	RATING A	RATING B
66-1810	ON-OFF/4PST 8P	15 AMPS/125 VAC	10 AMPS/250 VAC

HEAVY DUTY TOGGLE SWITCH

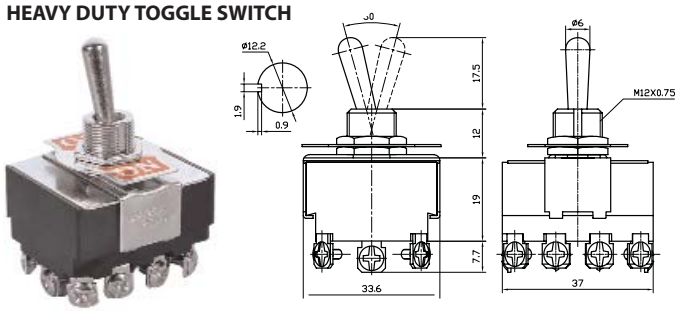

PART #	DESCRIPTION	RATING A	RATING B
66-1811	ON-ON/4PDT 12P	15 AMPS/125 VAC	10 AMPS/250 VAC
66-1815	ON-OFF-ON/4PDT 12P	15 AMPS/125 VAC	10 AMPS/250 VAC

HEAVY DUTY TOGGLE SWITCH

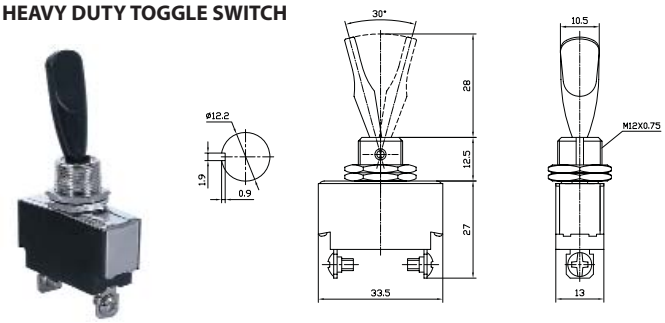

PART #	DESCRIPTION	RATING A	RATING B
66-1820	ON-OFF/SPST 2P	15 AMPS/125 VAC	10 AMPS/250 VAC

HEAVY DUTY TOGGLE SWITCH

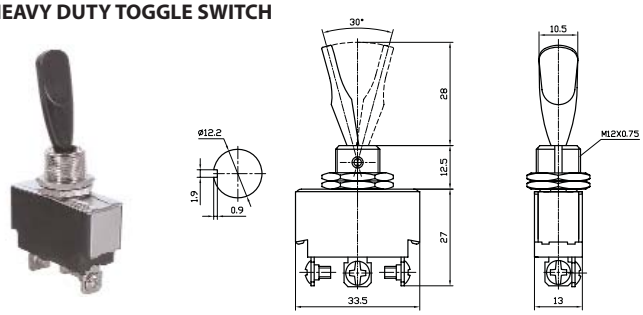

PART #	DESCRIPTION	RATING A	RATING B
66-1821	ON-ON/SPDT 3P	15 AMPS/125 VAC	10 AMPS/250 VAC
66-1822	ON-OFF-ON/SPDT 3P	15 AMPS/125 VAC	10 AMPS/250 VAC

HEAVY DUTY TOGGLE SWITCH

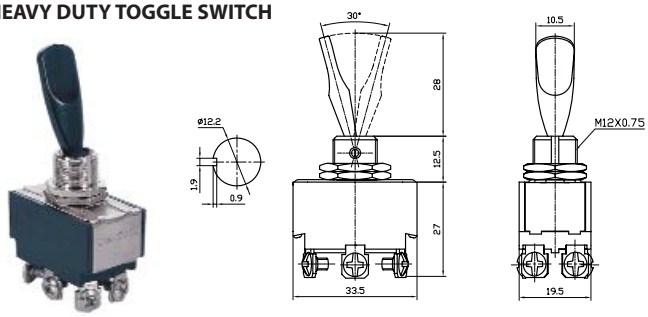

PART #	DESCRIPTION	RATING A	RATING B
66-1823	ON-ON/DPDT 6P	15 AMPS/125 VAC	10 AMPS/250 VAC
66-1824	ON-OFF-ON/DPDT 6P	15 AMPS/125 VAC	10 AMPS/250 VAC

HEAVY DUTY TOGGLE SWITCH

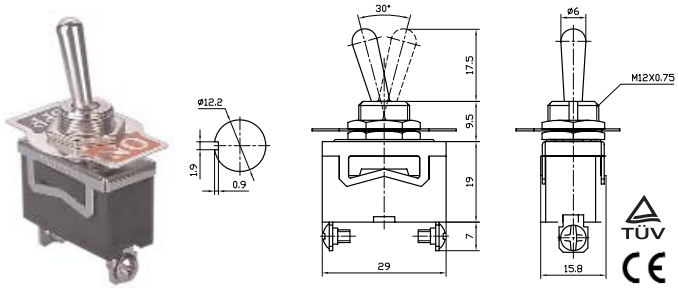

PART #	DESCRIPTION	RATING A	RATING B
66-1801	ON-OFF/SPST 2P	20 AMPS/125 VAC	15 AMPS/250 VAC

MEDIUM DUTY TOGGLE SWITCH

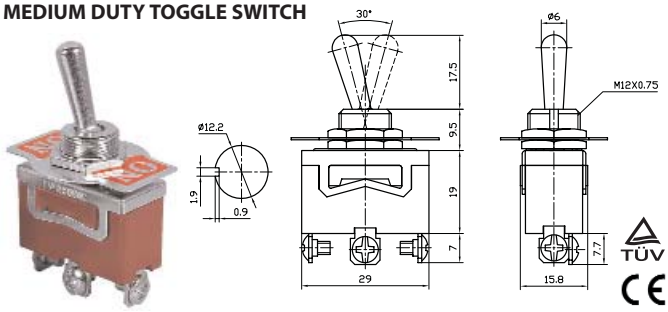

PART #	DESCRIPTION	RATING A	RATING B
66-1802	ON-ON/SPDT 3P	20 AMPS/125 VAC	15 AMPS/250 VAC
66-1803	ON-OFF-ON/SPDT 3P	20 AMPS/125 VAC	15 AMPS/250 VAC

HEAVY DUTY TOGGLE SWITCH

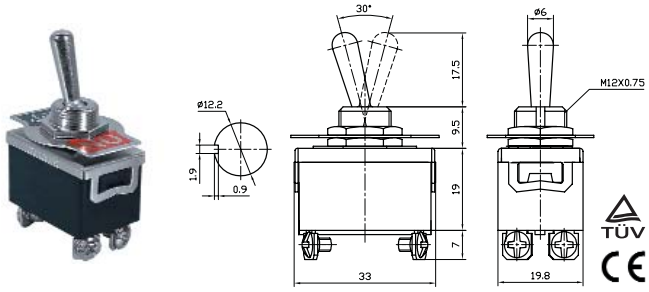

PART #	DESCRIPTION	RATING A	RATING B
66-1804	ON-OFF/DPST 4P	20 AMPS/125 VAC	15 AMPS/250 VAC

HEAVY DUTY TOGGLE SWITCH

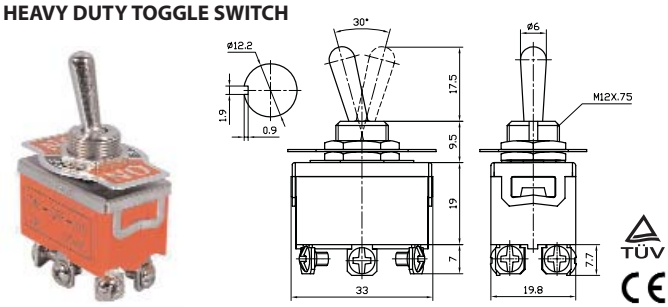

PART #	DESCRIPTION	RATING A	RATING B
66-1805	ON-ON/DPDT 6P	20 AMPS/125 VAC	15 AMPS/250 VAC
66-1806	ON-OFF-ON/DPDT 6P	20 AMPS/125 VAC	15 AMPS/250 VAC

HEAVY DUTY TOGGLE SWITCH SCREW TERMINAL

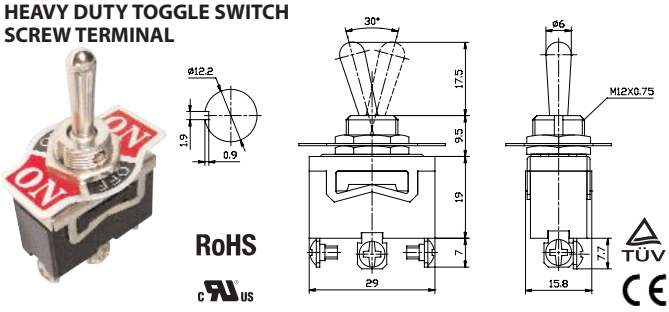

PART #	DESCRIPTION	RATING A	RATING B
66-1850	(ON)-OFF-(ON)/SPDT 3P	20 AMPS/125 VAC	15 AMPS/250 VAC

HEAVY DUTY TOGGLE SWITCH

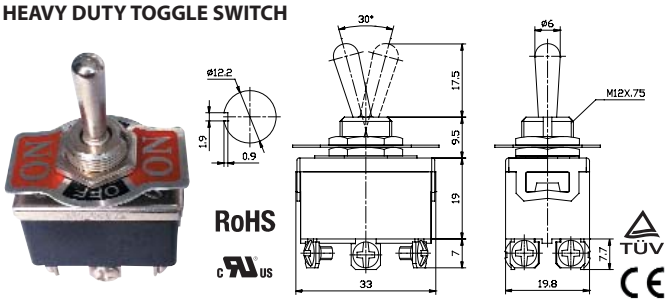

PART #	DESCRIPTION	RATING A	RATING B
66-1851	(ON)-OFF-(ON)/DPDT 6P	20 AMPS/125 VAC	15 AMPS/250 VAC
66-1855	ON-OFF-(ON)/DPDT 6P	20 AMPS/125 VAC	15 AMPS/250 VAC

HEAVY DUTY TOGGLE SWITCH

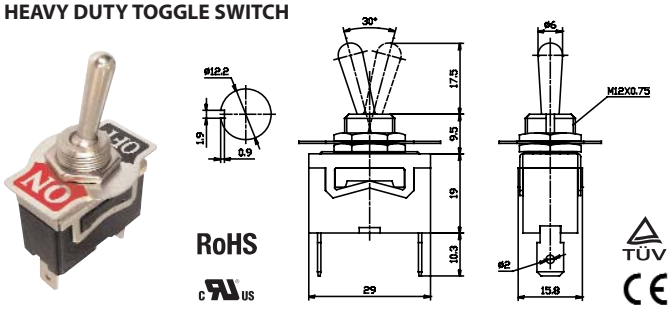

PART #	DESCRIPTION	RATING A	RATING B
66-1901	ON-OFF/SPST 2P	20 AMPS/125 VAC	15 AMPS/250 VAC

HEAVY DUTY TOGGLE SWITCH

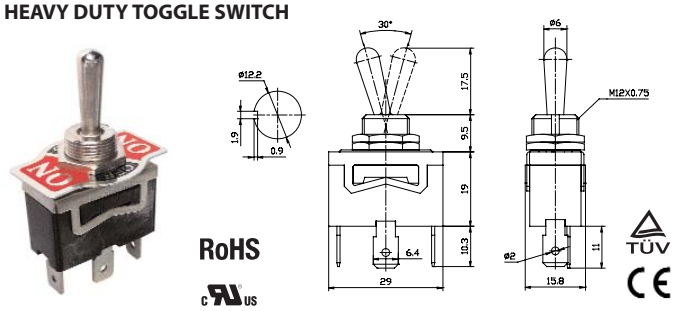

PART #	DESCRIPTION	RATING A	RATING B
66-1902	ON-ON/SPDT 3P	20 AMPS/125 VAC	15 AMPS/250 VAC
66-1903	ON-OFF-ON/SPDT 3P	20 AMPS/125 VAC	15 AMPS/250 VAC

HEAVY DUTY TOGGLE SWITCH

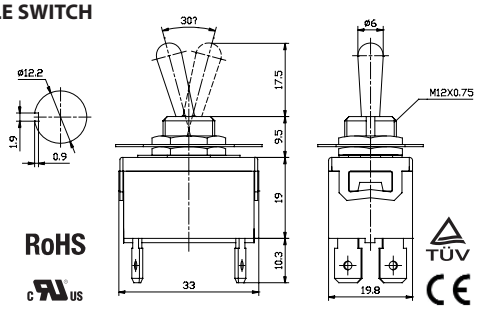

PART #	DESCRIPTION	RATING A	RATING B
66-1904	ON-OFF/DPST 4P	20 AMPS/125 VAC	15 AMPS/250 VAC

HEAVY DUTY TOGGLE SWITCH

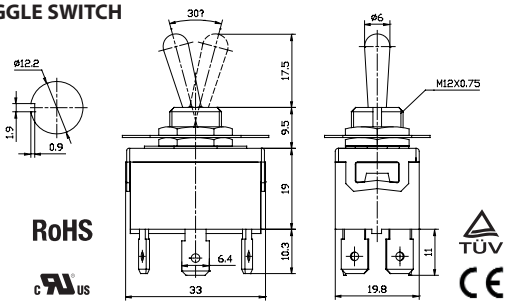

PART #	DESCRIPTION	RATING A	RATING B
66-1905	ON-ON/DPDT 6P	20 AMPS/125 VAC	15 AMPS/250 VAC
66-1906	ON-OFF-ON/DPDT 6P	20 AMPS/125 VAC	15 AMPS/250 VAC

HEAVY DUTY TOGGLE SWITCH

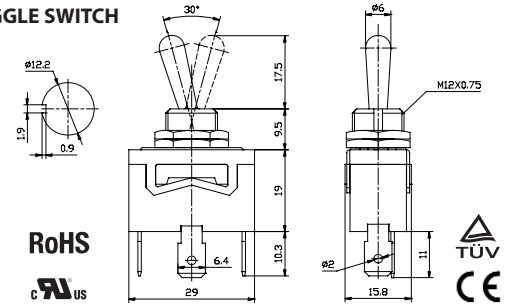

PART #	DESCRIPTION	RATING A	RATING B
66-1950	(ON)-OFF-(ON)/SPDT 3P	20 AMPS/125 VAC	15 AMPS/250 VAC

HEAVY DUTY TOGGLE SWITCH

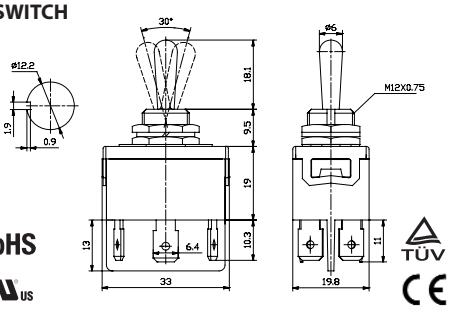

PART #	DESCRIPTION	RATING A	RATING B
66-1951	(ON)-OFF-(ON)/DPDT 3P	20 AMPS/125 VAC	15 AMPS/250 VAC
66-1955	ON-OFF-(ON)/DPDT 3P	20 AMPS/125 VAC	15 AMPS/250 VAC

STANDARD MICRO SWITCH

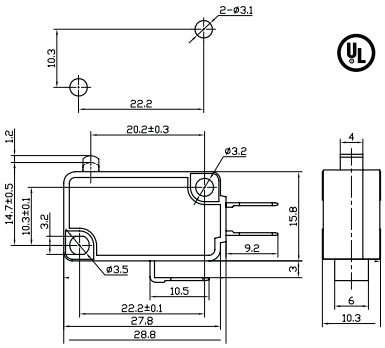

PART #	DESCRIPTION	RATING A	RATING B
66-4000	ON-(ON)/NO/NC 3P	10 AMPS/125 VAC	10 AMPS/250 VAC

STANDARD MICRO SWITCH

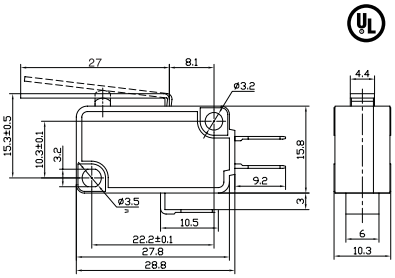

PART #	DESCRIPTION	RATING A	RATING B
66-4001	ON-(ON)/NO/NC 3P	10 AMPS/125 VAC	10 AMPS/250 VAC

STANDARD MICRO SWITCH

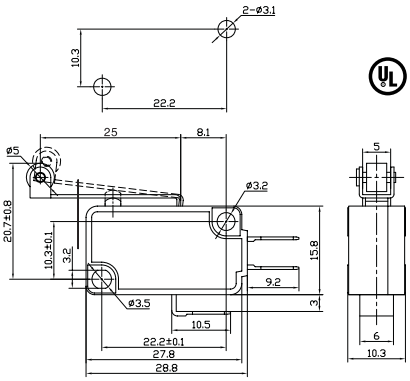

PART #	DESCRIPTION	RATING A	RATING B
66-4002	ON-(ON)/NO/NC 3P	10 AMPS/125 VAC	10 AMPS/250 VAC

STANDARD MICRO SWITCH

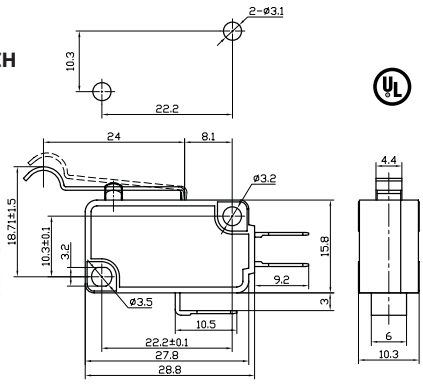

PART #	DESCRIPTION	RATING A	RATING B
66-4003	ON-(ON)/NO/NC 3P	10 AMPS/125 VAC	10 AMPS/250 VAC

MINI MICRO SWITCH

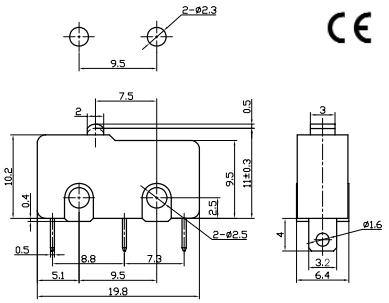

PART #	DESCRIPTION	RATING A	RATING B
66-4010	ON-(ON)/NO/NC 3P	5 AMPS/125 VAC	5 AMPS/250 VAC

MINI MICRO SWITCH

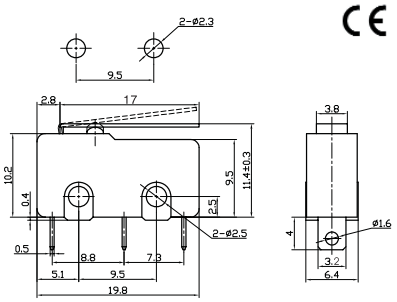

PART #	DESCRIPTION	RATING A	RATING B
66-4011	ON-(ON)/NO/NC 3P	5 AMPS/125 VAC	5 AMPS/250 VAC

MINI MICRO SWITCH

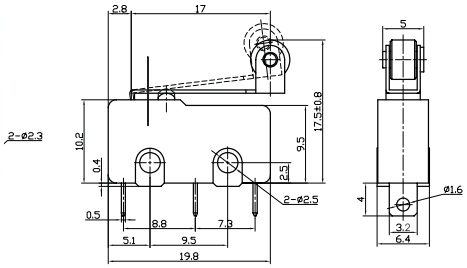

PART #	DESCRIPTION	RATING A	RATING B
66-4012	ON-(ON)/NO/NC 3P	5 AMPS/125 VAC	5 AMPS/250 VAC

MINI MICRO SWITCH

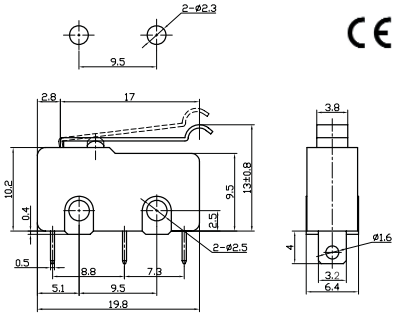

PART #	DESCRIPTION	RATING A	RATING B
66-4013	ON-(ON)/NO/NC 3P	5 AMPS/125 VAC	5 AMPS/250 VAC

PUSH BUTTON SWITCH

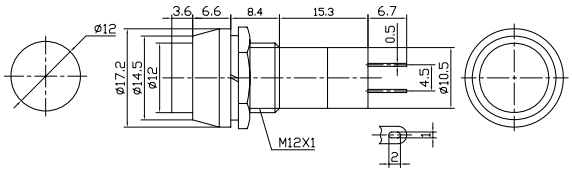

PART #	DESCRIPTION	RATING A	RATING B
66-2445	ON-OFF/SPST 2P	3 AMPS/125 VAC	1 AMPS/250 VAC
66-2446	OFF-(ON)/SPST 2P	3 AMPS/125 VAC	1 AMPS/250 VAC

PUSH BUTTON SWITCH

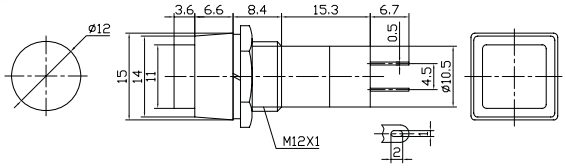

PART #	DESCRIPTION	RATING A	RATING B
66-2402	ON-OFF/SPST 2P	3 AMPS/125 VAC	1 AMPS/250 VAC
66-2404	OFF-(ON)/SPST 2P	3 AMPS/125 VAC	1 AMPS/250 VAC

PUSH BUTTON SWITCH

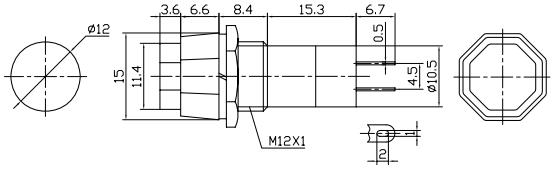

PART #	DESCRIPTION	RATING A	RATING B
66-2450	ON-OFF/SPST 2P	3 AMPS/125 VAC	1 AMPS/250 VAC
66-2451	OFF-(ON)/SPST 2P	3 AMPS/125 VAC	1 AMPS/250 VAC

PUSH BUTTON SWITCH

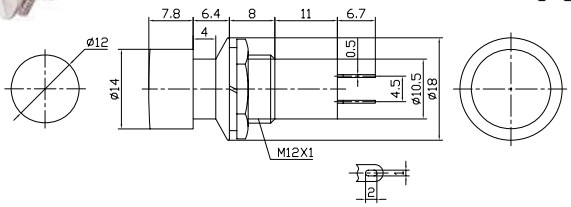

PART #	DESCRIPTION	RATING A	RATING B
66-2408	ON-OFF/SPST 2P	3 AMPS/125 VAC	1 AMPS/250 VAC
66-2410	OFF-(ON)/SPST 2P	3 AMPS/125 VAC	1 AMPS/250 VAC

PUSH BUTTON SWITCH

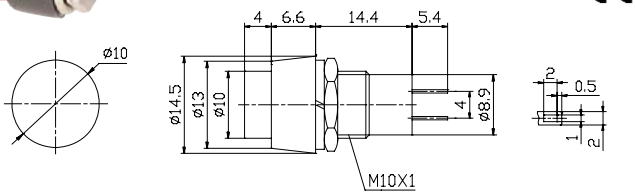

PART #	DESCRIPTION	RATING A	RATING B
66-2465	ON-OFF/SPST 2P	3 AMPS/125 VAC	1 AMPS/250 VAC
66-2466	OFF-(ON)/SPST 2P	3 AMPS/125 VAC	1 AMPS/250 VAC

PUSH BUTTON SWITCH

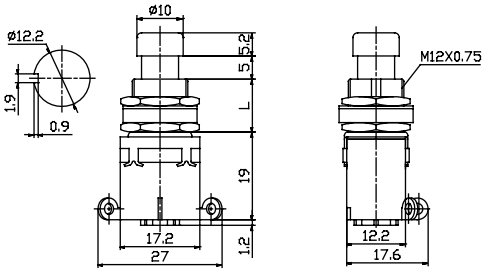

PART #	DESCRIPTION	RATING A	RATING B
66-2460	ON-ON/SPDT 3P	2 AMPS/125 VAC	4 AMPS/250 VAC
66-2461	ON-(OFF)/SPST 3P	2 AMPS/125 VAC	4 AMPS/250 VAC

PUSH BUTTON SWITCH

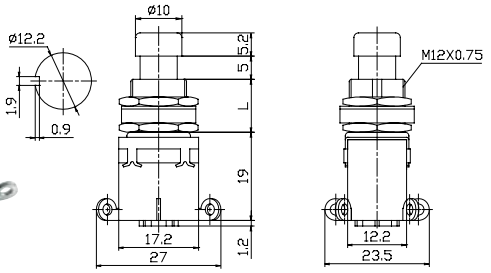

PART #	DESCRIPTION	RATING A	RATING B
66-2462	ON-ON/DPDT 6P	2 AMPS/125 VAC	4 AMPS/250 VAC
66-2463	ON-(OFF)/DPDT 6P	2 AMPS/125 VAC	4 AMPS/250 VAC

PUSH BUTTON SWITCH

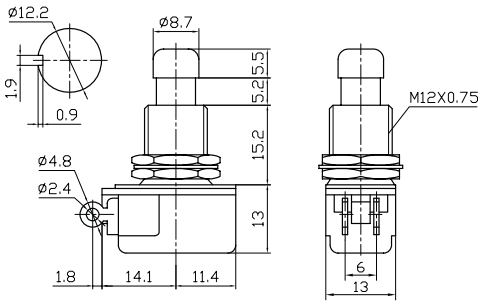

PART #	DESCRIPTION	RATING A	RATING B
66-2430	OFF-(ON)/SPST 2P	4 AMPS/125 VAC	2 AMPS/250 VAC

PUSH BUTTON SWITCH

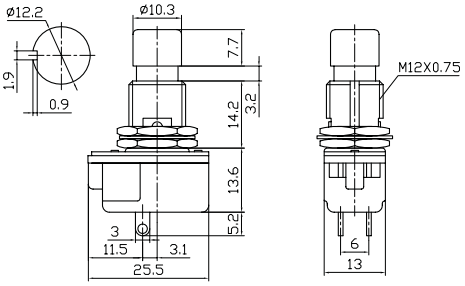

PART #	DESCRIPTION	RATING A	RATING B
66-2432	OFF-(ON)/SPST 2P	10 AMPS/125 VAC	6 AMPS/250 VAC

PUSH BUTTON SWITCH

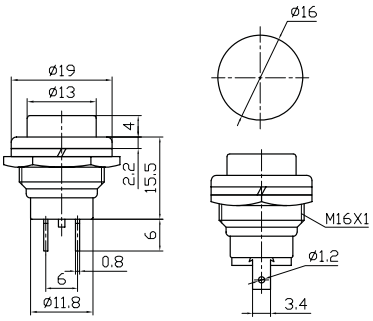

PART #	DESCRIPTION	RATING A	RATING B
66-2420 RED	ON-(OFF)/SPST 2P	4 AMPS/125 VAC	2 AMPS/250 VAC
66-2421 RED	OFF-(ON)/SPST 2P	4 AMPS/125 VAC	2 AMPS/250 VAC

PUSH BUTTON SWITCH

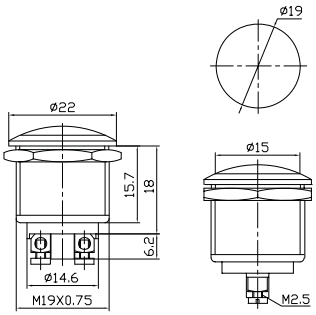

PART #	DESCRIPTION	RATING A	RATING B
66-2434	OFF-(ON)/SPST 2P	4 AMPS/125 VAC	2 AMPS/250 VAC

PUSH BUTTON SWITCH

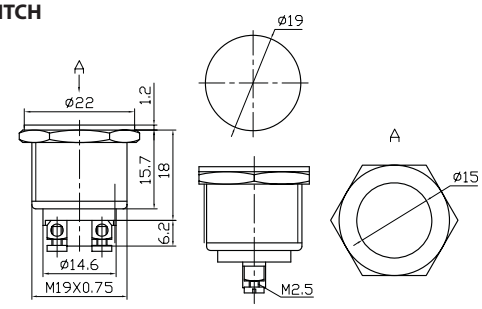

PART #	DESCRIPTION	RATING A	RATING B
66-2436	OFF-(ON)/SPST 2P	4 AMPS/125 VAC	2 AMPS/250 VAC

PUSH BUTTON SWITCH
WITH WATERPROOF RUBBER RING
IP66 PROTECTION

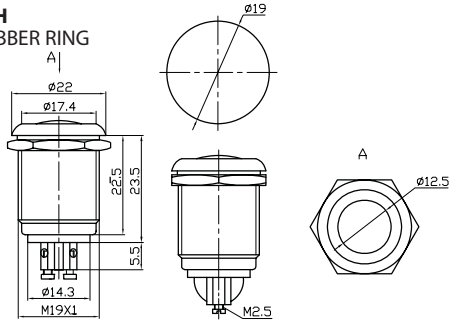

PART #	DESCRIPTION	RATING A	RATING B
66-2438	OFF-(ON)/SPST 2P/IP66	4 AMPS/125 VAC	2 AMPS/250 VAC

PUSH BUTTON SWITCH

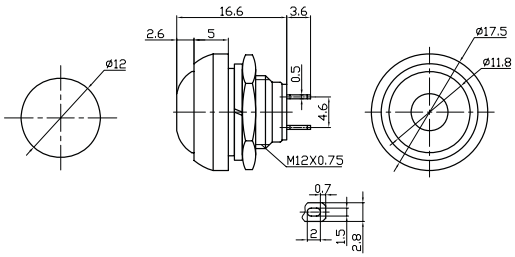

PART #	DESCRIPTION	RATING A	RATING B
66-2440 BK	OFF-(ON)/SPST 2P	3 AMPS/125 VAC	1 AMP/250 VAC
66-2441 RED	OFF-(ON)/SPST 2P	3 AMPS/125 VAC	1 AMP/250 VAC
66-2442 BLU	OFF-(ON)/SPST 2P	3 AMPS/125 VAC	1 AMP/250 VAC
66-2443 GN	OFF-(ON)/SPST 2P	3 AMPS/125 VAC	1 AMP/250 VAC
66-2444 YW	OFF-(ON)/SPST 2P	3 AMPS/125 VAC	1 AMP/250 VAC

PUSH BUTTON SWITCH

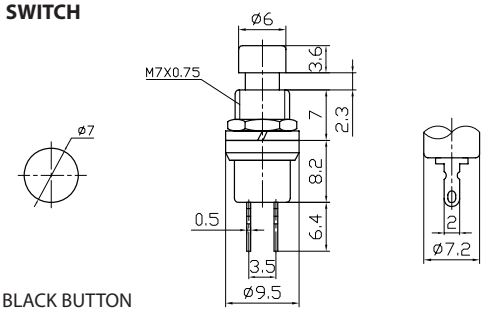

* BLACK BUTTON

PART #	DESCRIPTION	RATING A	RATING B
66-2412	OFF-(ON)/SPST 2P	3 AMPS/125 VAC	1 AMPS/250 VAC
66-2414*	ON-(OFF)/SPST 2P	3 AMPS/125 VAC	1 AMPS/250 VAC

PUSH BUTTON SWITCH

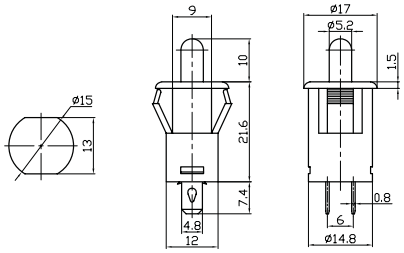

PART #	DESCRIPTION	RATING A	RATING B
66-2475	OFF-(ON)/SPST 2P	3 AMPS/125 VAC	1 AMPS/250 VAC

PUSH BUTTON SWITCH

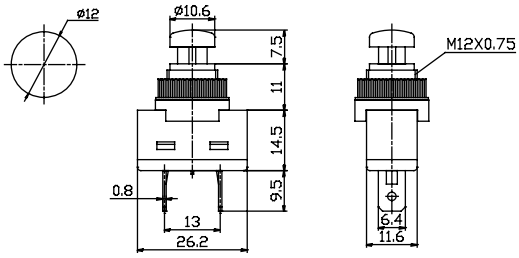

PART #	DESCRIPTION	RATING A	RATING B
66-2485	(ON)-OFF	20 AMPS/12 VDC	10 AMPS/125 VAC

AUTOMOTIVE SWITCH

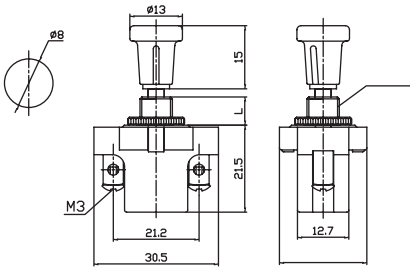

PART #	DESCRIPTION	RATING A	RATING B
66-2301	(L=7,13,20) SPST 2P	10AMPS/12VDC	6 AMPS/30 VDC

AUTOMOTIVE SWITCH

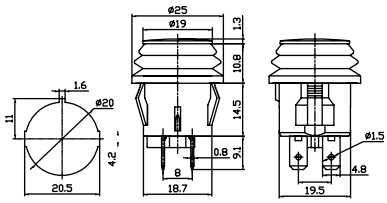

PART #	DESCRIPTION	RATING A	RATING B
66-2490 RED	ON-OFF	20 AMPS/12VDC	–
66-2491 BLUE	ON-OFF	20 AMPS/12VDC	–
66-2492 GREEN	ON-OFF	20 AMPS/12VDC	–
66-2493 AMBER	ON-OFF	20 AMPS/12VDC	–

AUTOMOTIVE SWITCH

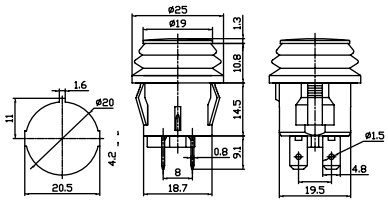

PART #	DESC.	12VAC	RATING B	RATING C
66-2495 RED	ON-OFF	10 AMPS/12VDC	6 AMPS/12VAC	20 AMPS/12VDC
66-2496 BLUE	ON-OFF	20 AMPS/12VDC	6 AMPS/12VAC	20 AMPS/12VDC
66-2497 GREEN	ON-OFF	20 AMPS/12VDC	6 AMPS/12VAC	20 AMPS/12VDC
66-2498 AMBER	ON-OFF	20 AMPS/12VDC	6 AMPS/12VAC	20 AMPS/12VDC

KNIFE SWITCH

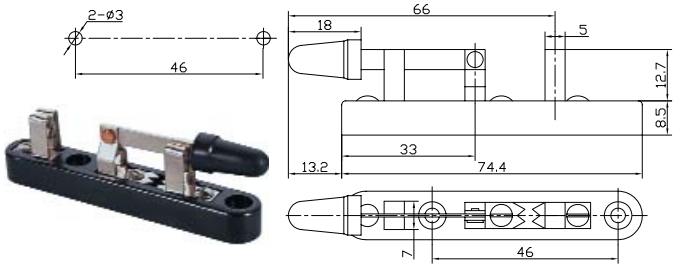

PART #	DESCRIPTION	RATING B
66-2820	ON-ON/SPDT	10 AMPS/12VDC

ILLUMINATED ROCKER SWITCH

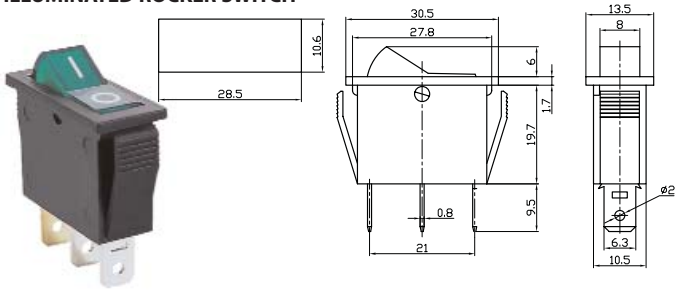

PART #	DESCRIPTION	RATING A	LAMP VOLTAGE
66-2237 AMBER	ON-(OFF)/SPST 3P	35 AMPS/12VDC	12VDC
66-2238 BLUE	ON-(OFF)/SPST 3P	35 AMPS/12VDC	12VDC
66-2239 GREEN	ON-(OFF)/SPST 3P	35 AMPS/12VDC	12VDC
66-2240 RED	ON-(OFF)/SPST 3P	35 AMPS/12VDC	12VDC

ILLUMINATED ROCKER SWITCH

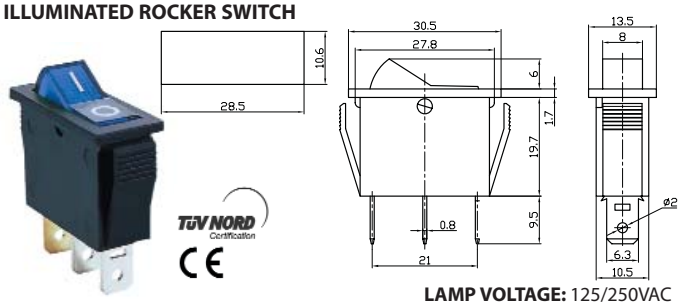

LAMP VOLTAGE: 125/250VAC

PART #	DESCRIPTION	RATING A	RATING B
66-2217 AMBER	ON-(OFF)/SPST 3P	20 AMPS/125VAC	15 AMPS/250VAC
66-2218 BLUE	ON-(OFF)/SPST 3P	20 AMPS/125VAC	15 AMPS/250VAC
66-2219 GREEN	ON-(OFF)/SPST 3P	20 AMPS/125VAC	15 AMPS/250VAC
66-2220 RED	ON-(OFF)/SPST 3P	20 AMPS/125VAC	15 AMPS/250VAC

ILLUMINATED ROCKER SWITCH

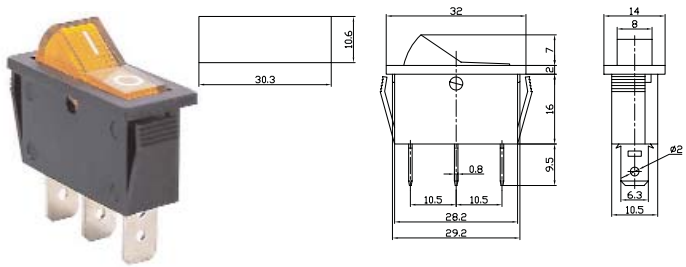

PART #	DESCRIPTION	RATING A	LAMP VOLTAGE
66-2207 AMBER	ON-(OFF)/SPST 3P	35 AMPS/12VDC	12VDC
66-2208 BLUE	ON-(OFF)/SPST 3P	35 AMPS/12VDC	12VDC
66-2209 GREEN	ON-(OFF)/SPST 3P	35 AMPS/12VDC	12VDC
66-2210 RED	ON-(OFF)/SPST 3P	35 AMPS/12VDC	12VDC

ILLUMINATED ROCKER SWITCH

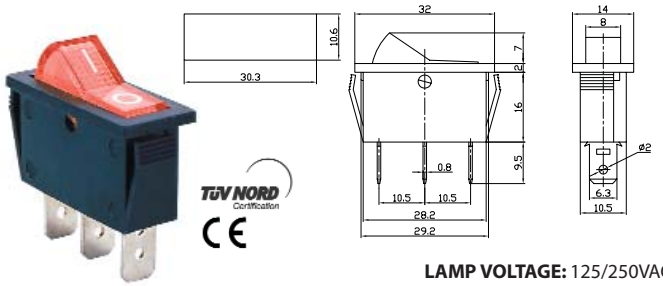

LAMP VOLTAGE: 125/250VAC

PART #	DESCRIPTION	RATING A	RATING B
66-2200 AMBER	ON-(OFF)/SPST 3P	20 AMPS/125VAC	15 AMPS/250VAC
66-2201 BLUE	ON-(OFF)/SPST 3P	20 AMPS/125VAC	15 AMPS/250VAC
66-2202 GREEN	ON-(OFF)/SPST 3P	20 AMPS/125VAC	15 AMPS/250VAC
66-2203 RED	ON-(OFF)/SPST 3P	20 AMPS/125VAC	15 AMPS/250VAC

ILLUMINATED MINI ROCKER SWITCH

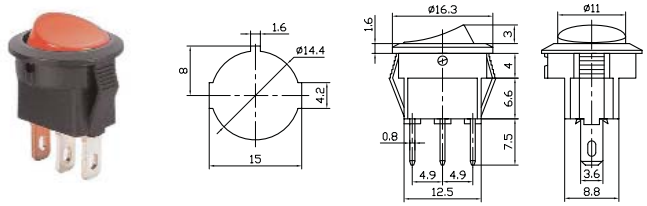

PART #	DESCRIPTION	RATING A	RATING B
66-2290 RED	ON-OFF/SPST 3P	6 AMPS/12VDC	—
66-2293 RED	ON-OFF/SPST 3P	3 AMPS/125 VAC	1 AMP/250 VAC

ILLUMINATED ROCKER SWITCH

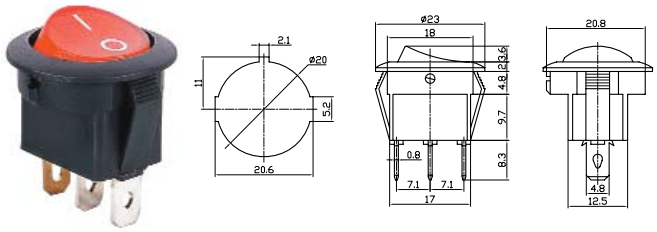

PART #	DESCRIPTION	RATING A	RATING B
66-2291 RED	ON-OFF/SPST 3P	20 AMPS/12VDC	—
66-2292 RED	ON-OFF/SPST 3P	13 AMPS/125 VAC	6.5 AMP/250 VAC

ILLUMINATED ROCKER SWITCH

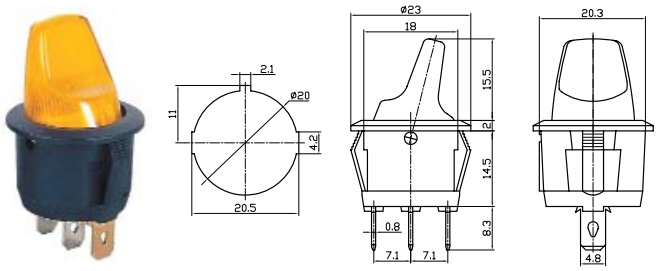

PART #	DESCRIPTION	RATING A	LAMP VOLTAGE
66-2040 AMBER	ON-(OFF)/SPST 3P	20 AMPS/12VDC	12VDC
66-2041 BLUE	ON-(OFF)/SPST 3P	20 AMPS/12VDC	12VDC
66-2042 GREEN	ON-(OFF)/SPST 3P	20 AMPS/12VDC	12VDC
66-2043 RED	ON-(OFF)/SPST 3P	20 AMPS/12VDC	12VDC

ROCKER SWITCH

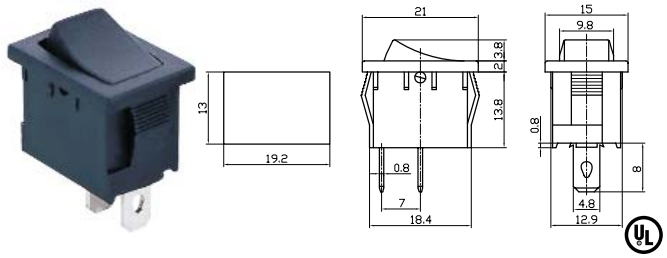

PART #	DESCRIPTION	RATING A	RATING B
66-2245	ON-OFF/SPST 2P	10 AMPS/125 VAC	6 AMPS/250 VAC

ROCKER SWITCH

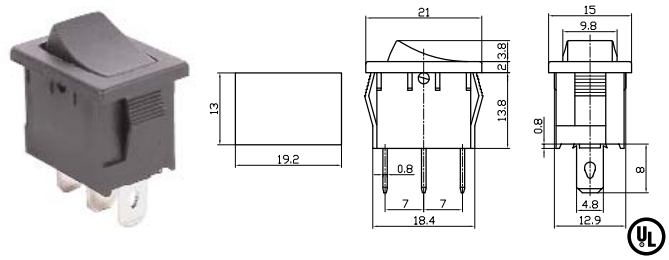

PART #	DESCRIPTION	RATING A	RATING B
66-2246	ON-ON/SPDT 3P	10 AMPS/125VAC	6 AMPS/250VAC
66-2247	ON-OFF-ON/SPDT 3P	10 AMPS/125VAC	6 AMPS/250VAC
66-2248	(ON)-OFF-(ON)/SPDT 3P	10 AMPS/125VAC	6 AMPS/250VAC

ILLUMINATED AUTOMOTIVE SWITCH

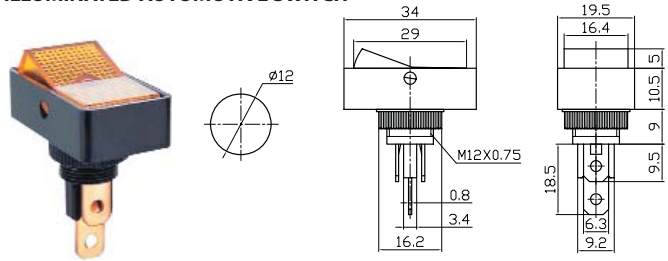

PART #	DESCRIPTION	RATING A	LAMP VOLTAGE
66-2271 AMBER	ON-OFF/SPST 3P	20 AMPS/12VDC	12VDC
66-2272 BLUE	ON-OFF/SPST 3P	20 AMPS/12VDC	12VDC
66-2273 GREEN	ON-OFF/SPST 3P	20 AMPS/12VDC	12VDC
66-2274 RED	ON-OFF/SPST 3P	20 AMPS/12VDC	12VDC

ILLUMINATED AUTOMOTIVE SWITCH

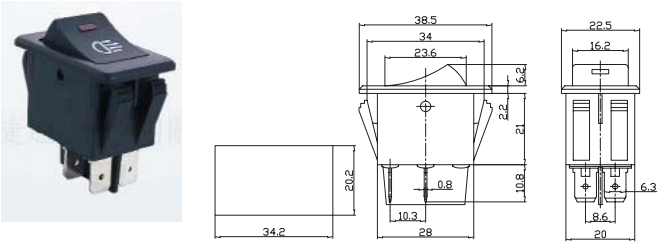

PART #	DESCRIPTION	RATING A
66-2295	ON-OFF/DPST 4P	35 AMPS/12 VDC (WITH LAMP)

ILLUMINATED LED AUTOMOTIVE SWITCH

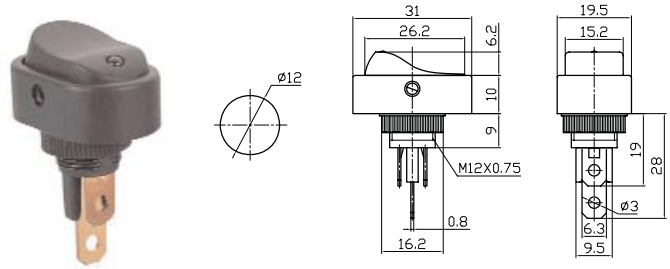

PART #	DESCRIPTION	RATING A	LAMP VOLTAGE
66-2280 AMBER	ON-OFF/SPST 3P	20 AMPS/12VDC	12VDC
66-2281 BLUE	ON-OFF/SPST 3P	20 AMPS/12VDC	12VDC
66-2282 GREEN	ON-OFF/SPST 3P	20 AMPS/12VDC	12VDC
66-2283 RED	ON-OFF/SPST 3P	20 AMPS/12VDC	12VDC

ILLUMINATED LED AUTOMOTIVE SWITCH

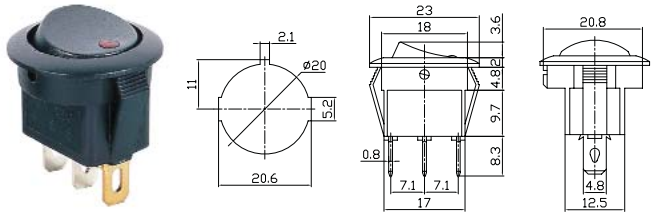

PART #	DESCRIPTION	RATING A	LAMP VOLTAGE
66-2285 AMBER	ON-OFF/SPST 3P	20 AMPS/12VDC	12VDC
66-2286BLUE	ON-OFF/SPST 3P	20 AMPS/12VDC	12VDC
66-2287 GREEN	ON-OFF/SPST 3P	20 AMPS/12VDC	12VDC
66-2288 RED	ON-OFF/SPST 3P	20 AMPS/12VDC	12VDC

AUTOMOTIVE SWITCH

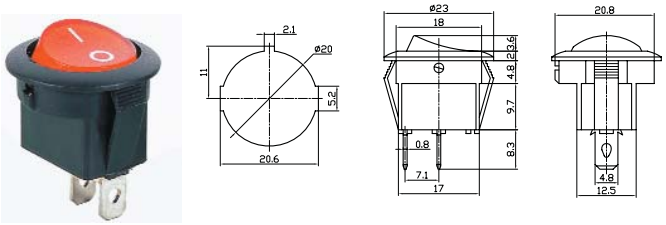

PART #	DESCRIPTION	RATING A	RATING B
66-2255	ON-OFF/SPST 2P	20 AMPS/12 VDC	10 AMPS/125 VAC

AUTOMOTIVE SWITCH

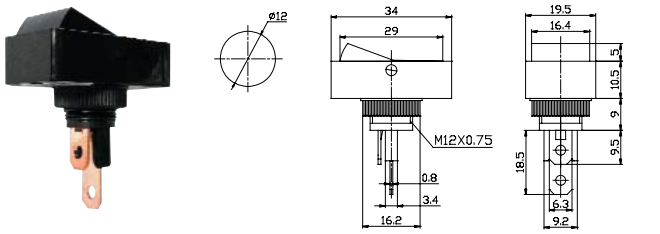

PART #	DESCRIPTION	RATING A	RATING B
66-2276	ON-OFF/SPST 2P	20 AMPS/12VDC	10 AMP/125 VAC

AUTOMOTIVE SWITCH

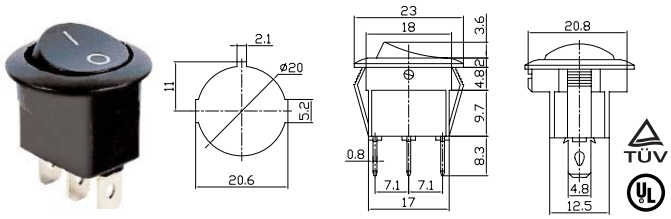

PART #	DESCRIPTION	RATING A	RATING B
66-2256	ON-ON/SPST 3P	20 AMPS/12VDC	10 AMP/125 VAC
66-2257	ON-OFF-ON/SPST 3P	20 AMPS/12VDC	10 AMP/125 VAC

ILLUMINATED AUTOMOTIVE SWITCH

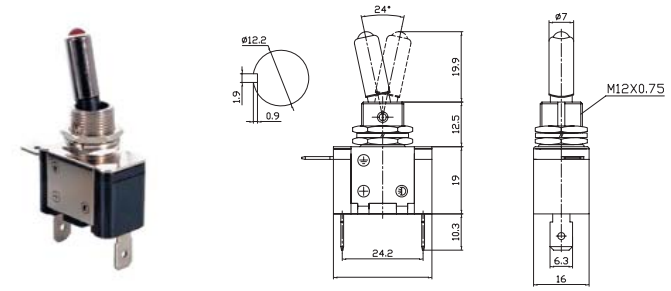

PART #	DESCRIPTION	RATING A
66-2050 RED	ON-OFF/SPST 3P	25 AMPS/12 VDC (WITH LAMP)
66-2051 BLUE	ON-OFF/SPST 3P	25 AMPS/12 VDC (WITH LAMP)
66-2052 GREEN	ON-OFF/SPST 3P	25 AMPS/12 VDC (WITH LAMP)
66-2053 AMBER	ON-OFF/SPST 3P	25 AMPS/12 VDC (WITH LAMP)

ILLUMINATED AUTOMOTIVE SWITCH

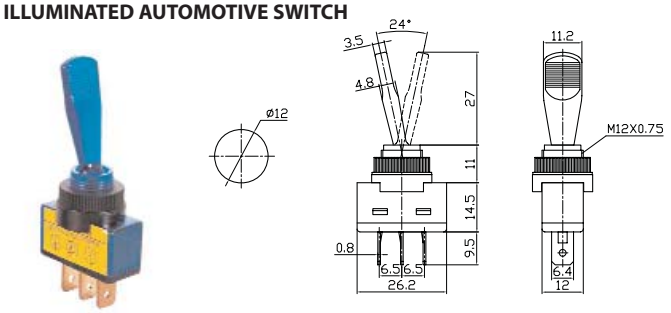

PART #	DESCRIPTION	RATING A	LAMP VOLTAGE
66-2022 AMBER	ON-OFF/SPST 3P	20 AMPS/12VDC	12VDC
66-2012 BLUE	ON-OFF/SPST 3P	20 AMPS/12VDC	12VDC
66-2032 GREEN	ON-OFF/SPST 3P	20 AMPS/12VDC	12VDC
66-2002 RED	ON-OFF/SPST 3P	20 AMPS/12VDC	12VDC

ILLUMINATED AUTOMOTIVE SWITCH

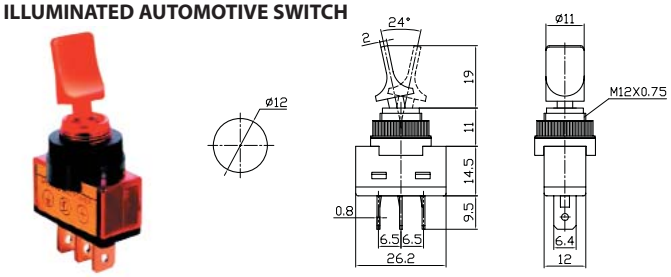

PART #	DESCRIPTION	RATING A	LAMP VOLTAGE
66-2035 AMBER	ON-OFF/SPST 3P	20 AMPS/12VDC	12VDC
66-2036 BLUE	ON-OFF/SPST 3P	20 AMPS/12VDC	12VDC
66-2037 GREEN	ON-OFF/SPST 3P	20 AMPS/12VDC	12VDC
66-2038 RED	ON-OFF/SPST 3P	20 AMPS/12VDC	12VDC

AUTOMOTIVE SWITCH

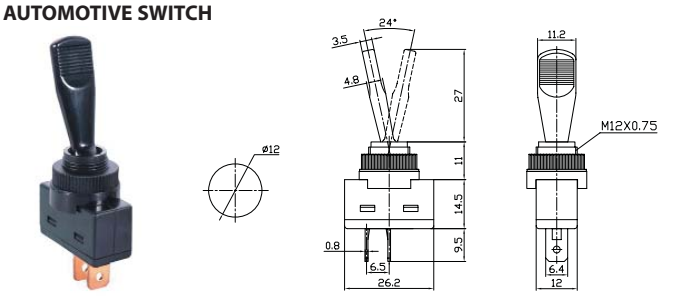

PART #	DESCRIPTION	RATING A	RATING B
66-2023	ON-OFF/SPST 2P	20 AMPS/12 VDC	10 AMPS/125 VAC

AUTOMOTIVE SWITCH

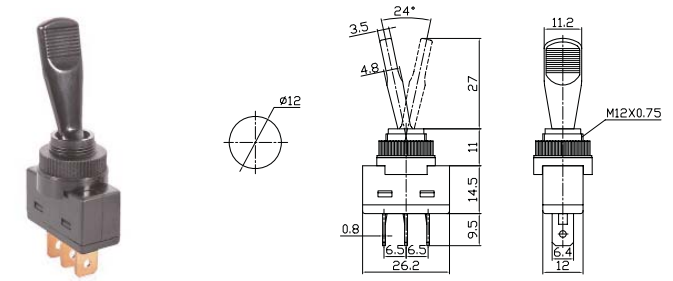

PART #	DESCRIPTION	RATING A	RATING B
66-2024	ON-ON/SPDT 3P	20 AMPS/12VDC	10 AMPS/125 VAC
66-2025	ON-OFF-ON/SPDT 3P	20 AMPS/12VDC	10 AMPS/125 VAC

AUTOMOTIVE SWITCH

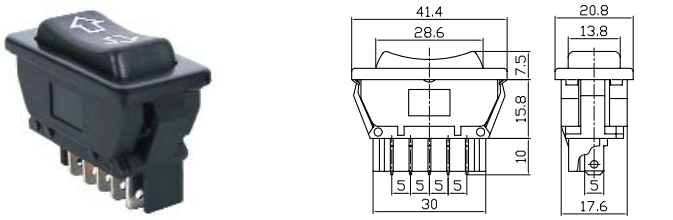

PART #	DESCRIPTION	RATING A	RATING B
66-2298	DPDT 5P	20 AMPS/12 VDC	10 AMPS/30 VDC

ILLUMINATED AUTOMOTIVE SWITCH

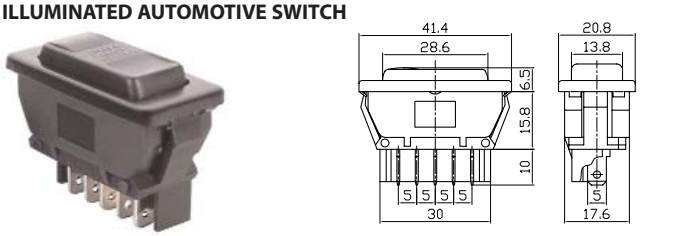

PART #	DESCRIPTION	RATING A	LAMP VOLTAGE
66-2299	DPDT 5P	20 AMPS/12 VDC	12 VDC

PIN SWITCH

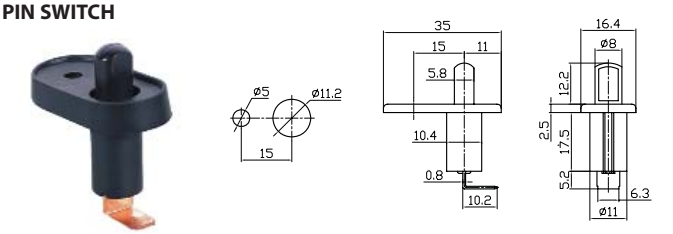

PART #	DESCRIPTION	RATING A	RATING B
66-3020	ON-(OFF)	20 AMPS/12 VDC	—

PIN SWITCH

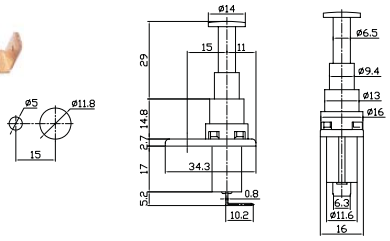

PART #	DESCRIPTION	RATING A	RATING B
66-3021	ON-(OFF)	20 AMPS/12 VDC	—

SWITCH COVER

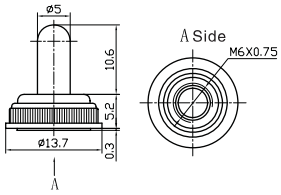

PART #	DESCRIPTION
66-5000	SWITCH COVER WITH WATERPROOF CAP

SWITCH COVER WITH O-RING

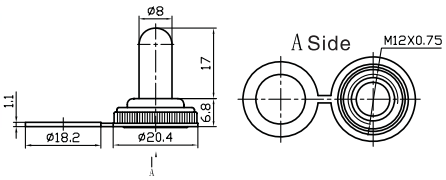

PART #	DESCRIPTION
66-5001	SWITCH COVER WITH O-RING & WATERPROOF CAP

SWITCH COVER

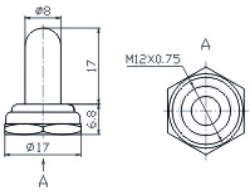

PART #	DESCRIPTION
66-5002	SWITCH COVER WITH O-RING & WATERPROOF CAP

AIRCRAFT TYPE SWITCH COVER

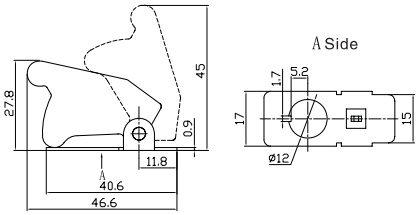

PART #	PART #
66-5009 PURPLE	66-5015 RED
66-5010 BLACK	66-5016 TRANSPARENT
66-5011 BLUE	66-5017 YELLOW
66-5012 CHROME	66-5018 TRANSPARENT RED
66-5013 GREEN	66-5019 TRANSPARENT BLUE
66-5014 CARBON	66-5020 TRANSPARENT GREEN

NON-ILLUMINATED GAME SWITCH

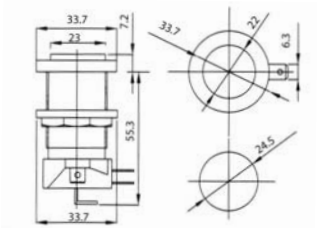

PART #	DESCRIPTION	RATING B
GMS-8B-C	NO/NC: AMBER, BLUE, GREEN. RED & WHITE	5 AMP/12 VDC

ILLUMINATED GAME SWITCH

AVAILABLE IN: AMBER, BLUE, GREEN, RED & WHITE

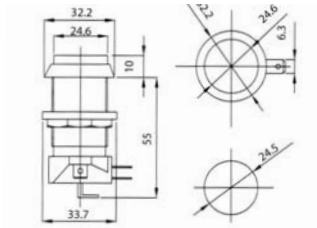

PART #	DESCRIPTION	RATING A	LAMP VOLTAGE
GMSI-7B-C	NO/NC	5 AMP/12 VDC	12VDC

ILLUMINATED GAME SWITC

AVAILABLE IN: AMBER, BLUE, GREEN, RED & WHITE

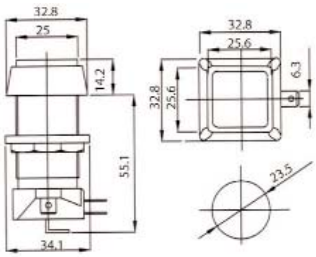

PART #	DESCRIPTION	RATING A	LAMP VOLTAGE
GMSI-5B-S	NO/NC	5 AMP/12 VDC	12VDC

ILLUMINATED GAME SWITCH

AVAILABLE IN: AMBER, BLUE, GREEN, RED & WHITE

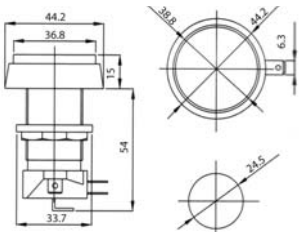

PART #	DESCRIPTION	RATING A	LAMP VOLTAGE
GMSI-4B-C	NO/NC	5 AMP/12 VDC	12VDC

ILLUMINATED GAME SWITCH

AVAILABLE IN: AMBER, BLUE, GREEN, RED & WHITE

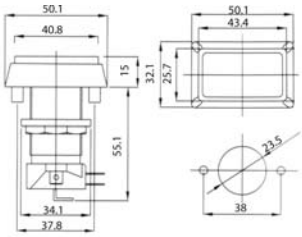

PART #	DESCRIPTION	RATING A	LAMP VOLTAGE
GMSI-3B-R	NO/NC	5 AMP/12 VDC	12VDC

ILLUMINATED GAME SWITCH

AVAILABLE IN: AMBER, BLUE, GREEN, RED & WHITE

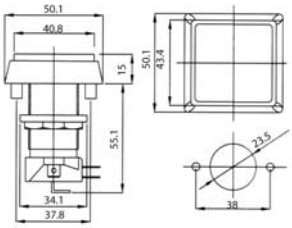

PART #	DESCRIPTION	RATING A	LAMP VOLTAGE
GMSI-2B-S	NO/NC	5 AMP/12 VDC	12VDC

ILLUMINATED GAME SWITCH

AVAILABLE IN: AMBER, BLUE, GREEN, RED & WHITE

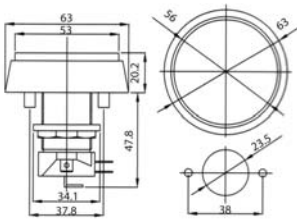

PART #	DESCRIPTION	RATING A	LAMP VOLTAGE
GMSI-1B-C	NO/NC	5 AMP/12 VDC	12VDC

PIN SWITCH - LONG

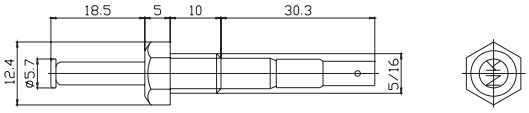

PART #	DESCRIPTION	LENGTH
66-3007	ACCEPTS .156" DIAMETER MALE BULLET	2.5"

PIN SWITCH - LONG ADJUSTABLE HEAD

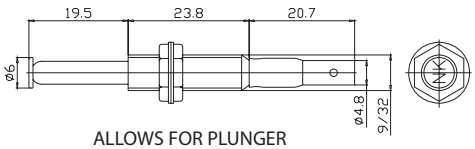

ALLOWS FOR PLUNGER HEIGHT ADJUSTMENT

PART #	DESCRIPTION	LENGTH
66-3013	ACCEPTS .156" DIAMETER MALE BULLET	2.5"

RIGHT ANGLE PIN SWITCH - LONG ADJUSTABLE HEAD

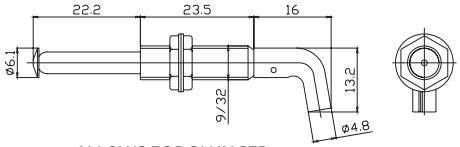

ALLOWS FOR PLUNGER HEIGHT ADJUSTMENT

PART #	DESCRIPTION	LENGTH
66-3015	ACCEPTS .156" DIAMETER MALE BULLET	2.5"

NYLON TIPPED PIN SWITCH

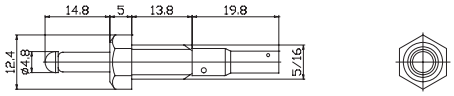

PART #	DESCRIPTION	LENGTH
66-3022	ACCEPTS .156" DIAMETER MALE BULLET	2.0"

PIN SWITCH

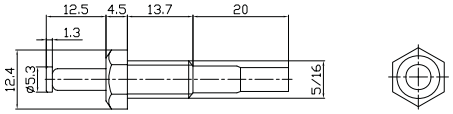

PART #	DESCRIPTION	LENGTH
66-3014	ACCEPTS .156" DIAMETER MALE BULLET	2.0"

PIN SWITCH- ADJUSTABLE HEAD

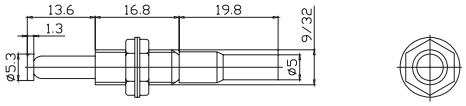

ALLOWS FOR PLUNGER HEIGHT ADJUSTMENT

PART #	DESCRIPTION	LENGTH
66-3008	ACCEPTS .156" DIAMETER MALE BULLET	2.0"

PIN SWITCH- FLANGE MOUNTED

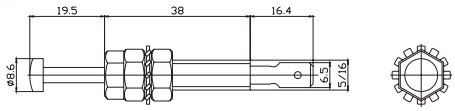

POLYCARBONATE SHAFT

PART #	DESCRIPTION	LENGTH
66-3005	COPPER QC TERM.	2.75"

PIN SWITCH- NICKEL PLATED

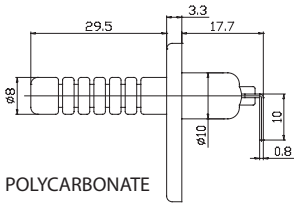

RESIZEABLE POLYCARBONATE PLUNGER

PART #	DESCRIPTION
66-3023	TIN PLATED BRASS Q.C. TERMINALS

PIN SWITCH- NICKEL PLATED & RUBBER BOOT

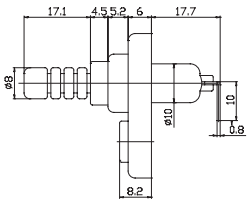
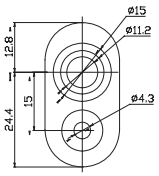

PART #	DESCRIPTION
66-3024	RESIZEABLE POLYCARBONATE PLUNGER & RUBBER BOOT

PIN SWITCH- VERTICAL FLANGE MOUNT

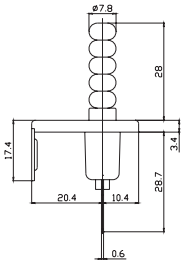
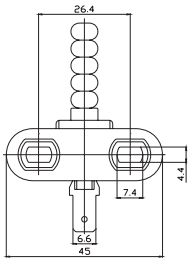

PART #	DESCRIPTION
66-3025	FOR UNDER-HOOD APPLICATIONS

DELUXE PIN SWITCH

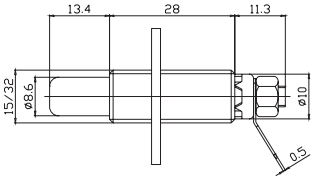
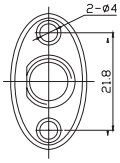

RESIZEABLE POLYCARBONATE PLUNGER

PART #	DESCRIPTION	LENGTH
66-3001	HEAVY STEEL MOUNTING PLATE W/ .250" MALE	1.625"

SLIDING VAN DOOR SWITCH

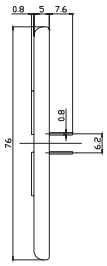
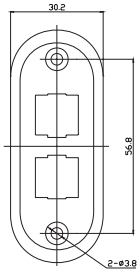

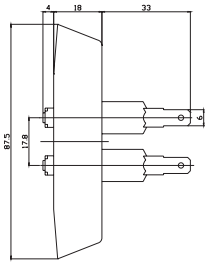
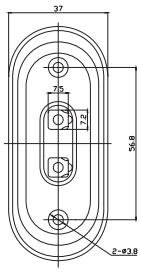

PART #	DESCRIPTION
66-3026	DOUBLE PIN SWITCH WITH MATCHING PLATE

REED SWITCH WITH MAGNET

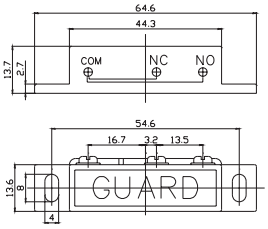

PART #	DESCRIPTION
66-2812	NORMALLY OPEN/NORMALLY CLOSED WITH MAGNET

REED SWITCH WITH MAGNET

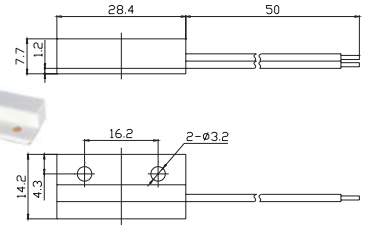

PART #	DESCRIPTION
66-3030	N.O. WITH 12" LEADS & TEST POINTS

MERCURY TILT SWITCH

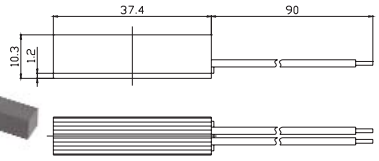

PART #	DESCRIPTION
66-3031	N.O. WITH 12" LEADS & TEST POINTS

PIN SWITCH BRACKET- RIGHT ANGLE

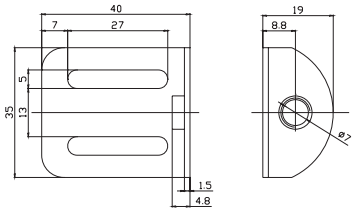

PART #	DESCRIPTION
66-5005	18G. BRACKET, .25" THREADED HOLE, 1.125" ADJUSTMENT SLOT

PIN SWITCH BRACKET

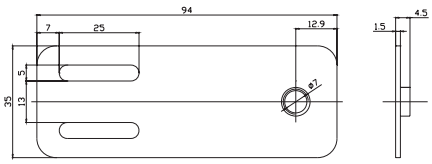

PART #	DESCRIPTION
66-5006	18G. BRACKET, .25" THREADED HOLE, 1.125" ADJUSTMENT SLOT

KEY SWITCH

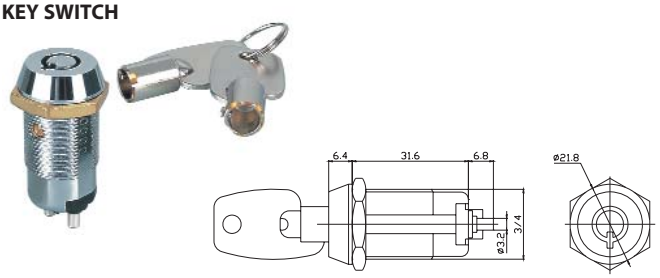

PART #	DESCRIPTION
66-2802	ON-OFF ROUND KEY

KEY SWITCH

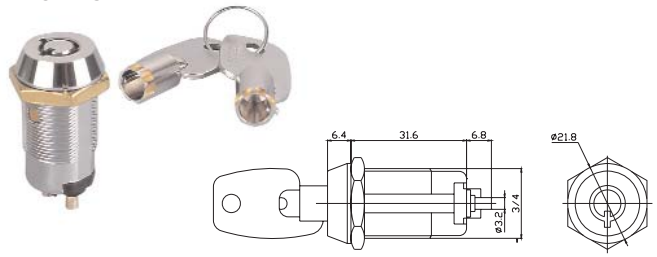

PART #	DESCRIPTION
66-2804	MOMENTARY ROUND KEY SWITCH

KEY SWITCH

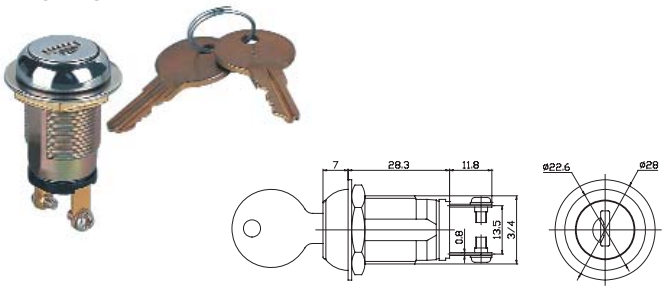

PART #	DESCRIPTION
66-2808	ON-OFF FLAT KEY SWITCH

RECTANGLE ILLUMINATED PANEL LAMPS

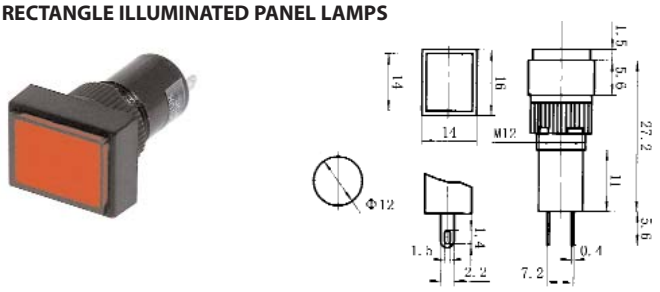

PART #	DESCRIPTION	RATING A	RATING B
NN12RR RED	NO/NC•12mmØ	12 AMPS/220VDC	24VDC
NN12RBL BLUE	NO/NC•12mmØ	12 AMPS/220VDC	24VDC
NN12RGR GREEN	NO/NC•12mmØ	12 AMPS/220VDC	24VDC
NN12ROR AMBER	NO/NC•12mmØ	12 AMPS/220VDC	24VDC

ROUND ILLUMINATED LED PANEL LAMPS

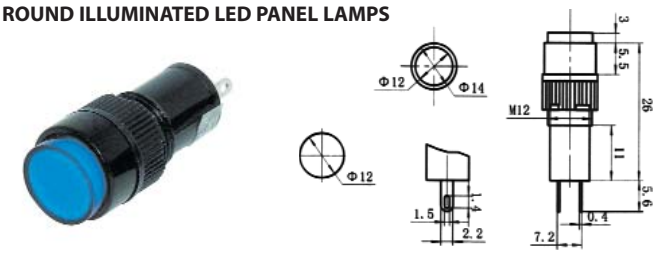

PART #	DESCRIPTION	RATING A	RATING B
NN12CR RED	NO/NC•12mmØ	12 AMPS/220VDC	24VDC
NN12CBL BLUE	NO/NC•12mmØ	12 AMPS/220VDC	24VDC
NN12CGR GREEN	NO/NC•12mmØ	12 AMPS/220VDC	24VDC
NN12COR AMBER	NO/NC•12mmØ	12 AMPS/220VDC	24VDC

SQUARE ILLUMINATED LED PANEL LAMPS

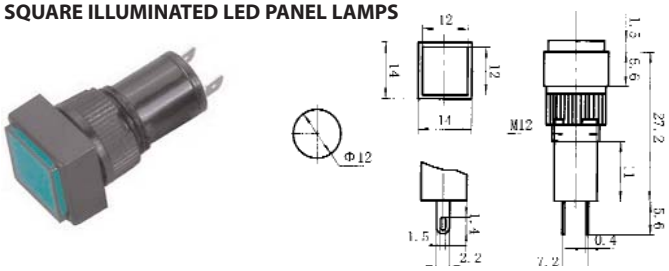

PART #	DESCRIPTION	RATING A	RATING B
NN12SR RED	NO/NC•12mmØ	12 AMPS/220VDC	24VDC
NN12SBL BLUE	NO/NC•12mmØ	12 AMPS/220VDC	24VDC
NN12SGR GREEN	NO/NC•12mmØ	12 AMPS/220VDC	24VDC
NN12SOR AMBER	NO/NC•12mmØ	12 AMPS/220VDC	24VDC

RECTANGLE ILLUMINATED PANEL LAMPS

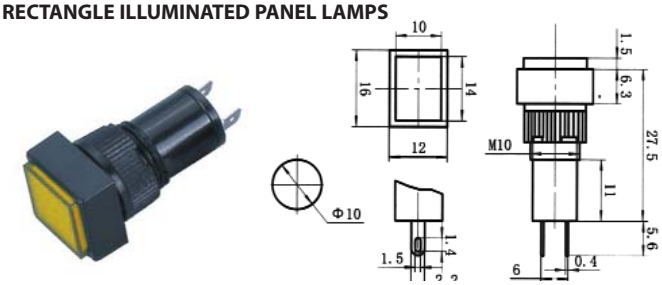

PART #	DESCRIPTION	RATING A	RATING B
NN10RR RED	NO/NC•10mmØ	12 AMPS/220VDC	24VDC
NN10RBL BLUE	NO/NC•10mmØ	12 AMPS/220VDC	24VDC
NN10RGR GREEN	NO/NC•10mmØ	12 AMPS/220VDC	24VDC
NN10ROR AMBER	NO/NC•10mmØ	12 AMPS/220VDC	24VDC

ROUND ILLUMINATED LED PANEL LAMPS

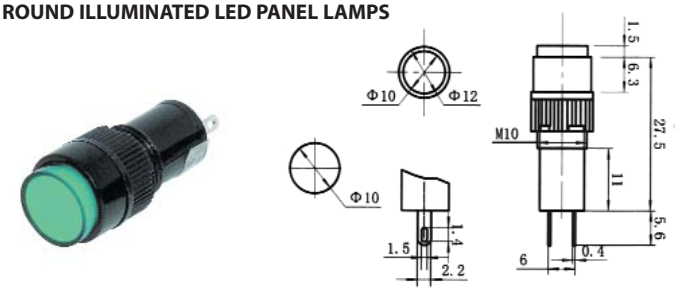

PART #	DESCRIPTION	RATING A	RATING B
NN10CR RED	NO/NC•10mmØ	12 AMPS/220VDC	24VDC
NN10CBL BLUE	NO/NC•10mmØ	12 AMPS/220VDC	24VDC
NN10CGR GREEN	NO/NC•10mmØ	12 AMPS/220VDC	24VDC
NN10COR AMBER	NO/NC•10mmØ	12 AMPS/220VDC	24VDC

SQUARE ILLUMINATED LED PANEL LAMPS

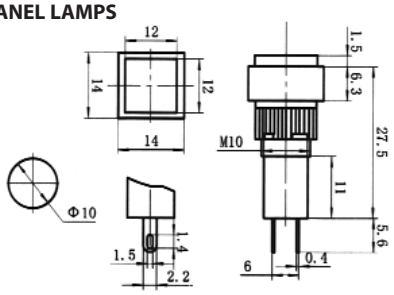

PART #	DESCRIPTION	RATING A	RATING B
NN10SR RED	NO/NC•10mmØ	12 AMPS/220VDC	24VDC
NN10SBL BLUE	NO/NC•10mmØ	12 AMPS/220VDC	24VDC
NN10SGR GREEN	NO/NC•10mmØ	12 AMPS/220VDC	24VDC
NN10SOR AMBER	NO/NC•10mmØ	12 AMPS/220VDC	24VDC

12VOLT INDICATOR LAMP

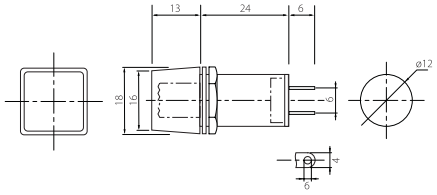

PART #	DESCRIPTION	RATING A
N799PA AMBER	24mm SHAFT, 18mm SQUARE BASE	12VDC
N799PBL BLUE	24mm SHAFT, 18mm SQUARE BASE	12VDC
N799PC CLEAR	24mm SHAFT, 18mm SQUARE BASE	12VDC
N799PG GREEN	24mm SHAFT, 18mm SQUARE BASE	12VDC
N799PR RED	24mm SHAFT, 18mm SQUARE BASE	12VDC

COAST
ELECTRONICS
SUPPLY

Coast Electronics Supply

12753 Moore St

Cerritos, CA 90703 USA

Local: 562-926-5758

Fax: 562-926-7270

Email: sales@cesparts.com

Switches_2011C.qxd 02/15/12